Bitenmed

Bitenmed
LEARN MORE

WEARABLE BREAST PUMP

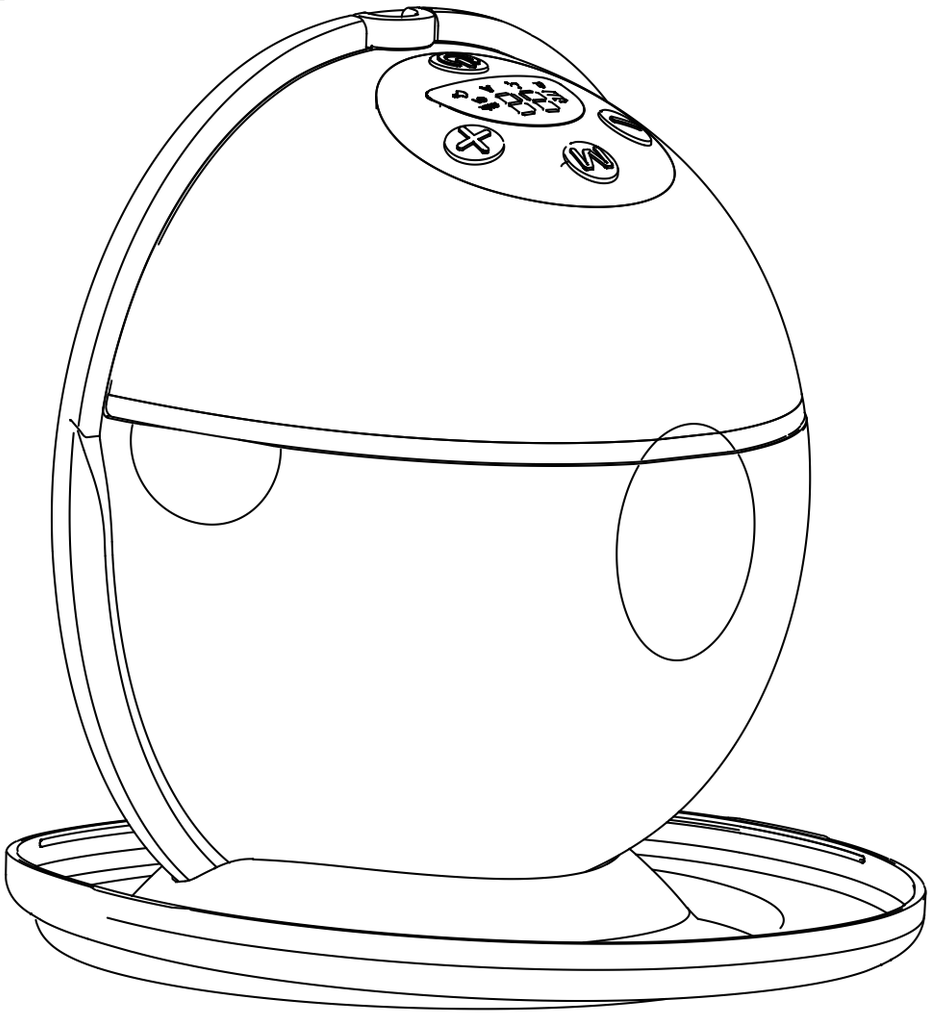

The actual product color may differ from the image shown.

K8

USER MANUAL

Read this user manual carefully before using this device and keep this manual for future reference.

1.SAFETYINFORMATION

⚠Warning

1. Do not use this deyiiaif you have a cardiac pacemaker, implanted defibrillator, or other implanted metallicX:24 mmdevice.Such use could cause electrical interference or death.
2. This breast pump is not intended for use by persons (including children) with impaired physical, sensory, or mental capabilities, or those lacking experience and knowledge. Such persons can only use this breast pump under the supervision of adult or after having received proper instruction concerning the use of the appliance by the person responsible for their safety.
3. Danger: To reduce the risk of electrocution:
   * Always unplug electrical devices immediately after charging.
   * Do not use electrical devices while bathing, showering, driving, or swimming.
   * Do not reach for electrical products that have fallen into water, please unplug the power adapter from the wall outlet immediately.
4. The wearable breast pump is a personal care item and for hygienic reasons should never be shared between mothers or resold from one mother to another. Either of these actions will void the warranty.
5. If you are a mother who is infected with Hepatitis B, Hepatitis C, or Human Immunodeficiency Virus (HIV), pumping breast milk using the wearable breast pump will not reduce or remove the risk of transmitting the virus to your baby through your breast milk.
6. Close supervision is necessary when the product is used near children or those with disabilities. Do not allow children or pets to play with the motor unit, packaging materials,or accessories.
7. Use the product only for its intended use as described in this manual.
8. Only use attachments or milk collection components recommended by the manufacturer.
9. Check the power adapter before charging, never use the damaged power adapter.

10. Never leave the device unattended when charging.
11. Keep the product and all attachments away from heated surfaces
12. Never use it while sleeping or drowsy.
13. Do not operate where aerosol spray products are being used or where oxygen is being administered.
14. Do not use the device around explosive or flammable material, in an MRI environment, in a hyperbaric chamber, or near a fireplace or radiant heater
15. Avoid strangulation resulting from charging cables.
16. Users are not allowed to repair the product on their own. Doing so invalidates any warranty. For repairs, send the product to the manufacturer or a designated franchise distributor.
17. Always switch off the breast pump before attempting to remove the pump body from your breast, in order to release the vacuum.
18. If irritation or discomfort occurs, discontinue use and see a doctor.
19. Powered breast pumps that are desiqned for single users should never be rented or shared.
20. Never use the breast pump while you are pregnant, as pumping can induce labor.
21. The temperature of the portion of the device applied to the skin can reach temperatures as high as 43.9 'C. Excessively high temperatures may cause skin burns. Therefore, please ensure that the skin of your breast is intact and healthy before use. If you feel the device is overheating, please turn off the device. In order to avoid low-temperature burns, the maximum period of continuous use shall not exceed 30 min per instance, with at least 5 min intervals between uses to allow the device to cool down.
22. For product service life (i.e. working life)
    The device has no shelf life but a product service life of one year. Please check to ensure the product operates normally prior to use. Use beyond the indicated service life may lead to degradation of product performance. For example, the product may not be able to correctly control the vacuum, resulting in excessive vacuum pressure which may cause injuries.

2. PRODUCT DESCRIPTION

2.1 Parts

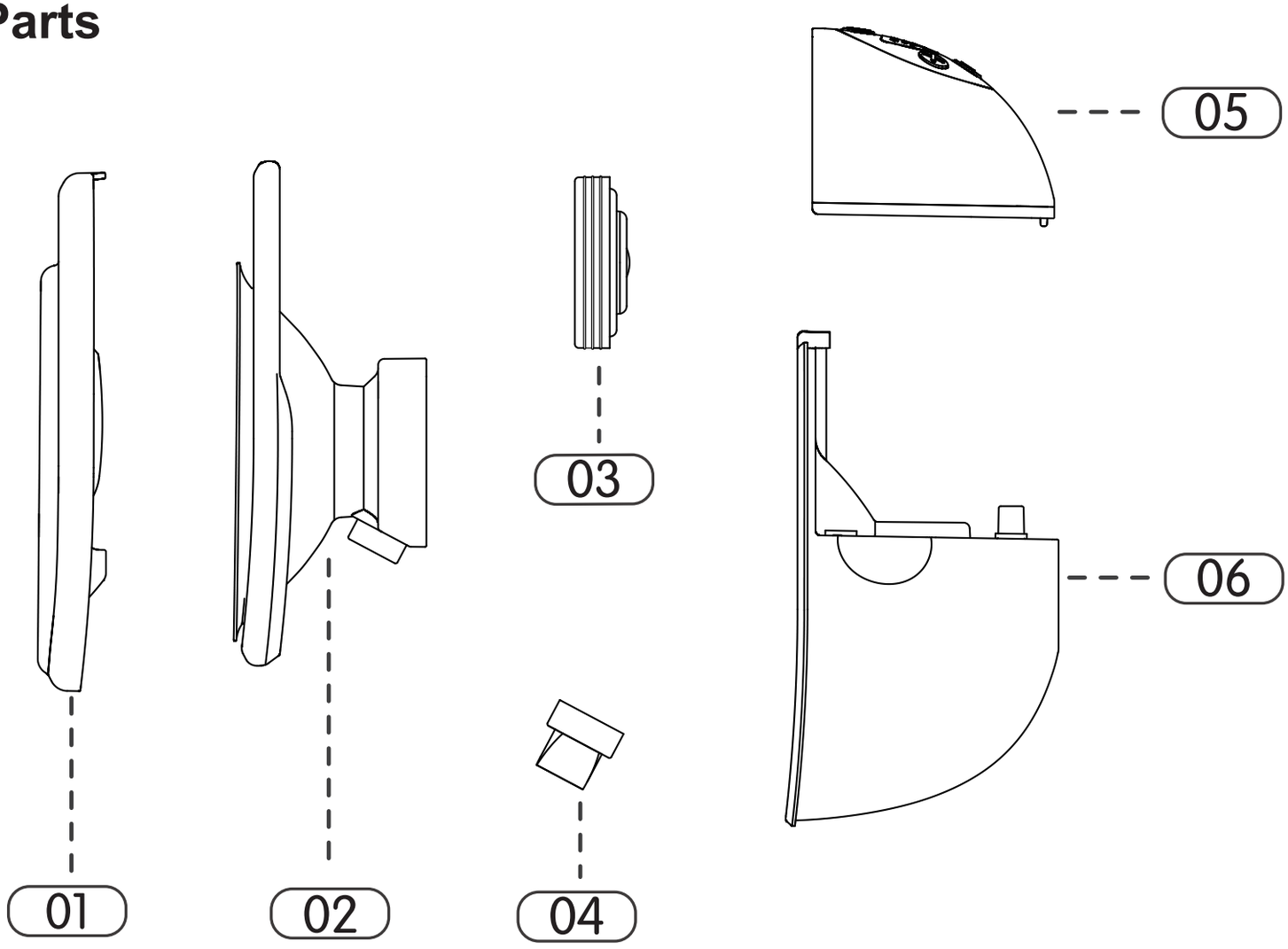

01 Dust Cover
02 Flange
03 Diaphragm
04 Valve
05 Pump Motor
06 Milk Collector

2.2 Control panel

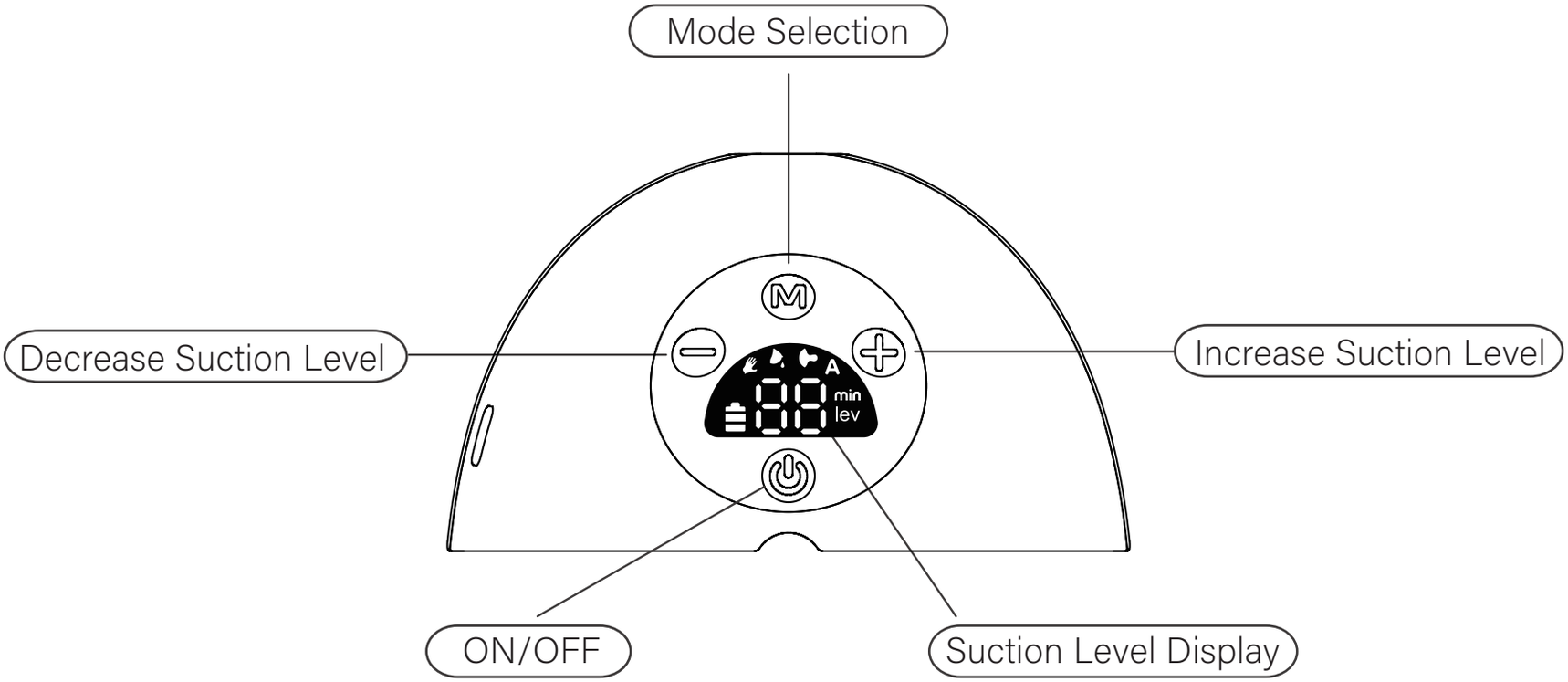

Control panel Description	
Buttons and LEDs	Functions
M	Short-press to switch to the next mode in the following order: Stimulation-Expression-Lactation-Traction(order of cycle)
⏻	Long-press the button for 2 seconds to turn the device on or off Short-press the button to start or pause operation.
+	Increase suction level

	Decrease Suction Level
	Stimulation Mode In this mode, the breast pump begins with a quick and short sucking pattern to get your milk to start flowing. There are 12 suction levels to choose from.
	Expression Mode The breast pump begins with a slow and long sucking pattern for milk expression, where the suction is deeper and more effective.There are12 suction levels to choose from.
	Dual-frequency Mode This mode is specially designed for breastfeeding moms with inverted and flat nipples.In this mode, the breast pump begins with low suction-pause-high suction-release and repeats this process, sucking more sufficiently.
	Two-in-one Mode In this mode, the breast pump begins with 5 quick and short sucking patterns, followed by a slow and long sucking pattern. There are12suction levels to choose from.
	Suction level display: The number light to display asuction level, on the time, the “lev” is lighting; Operation duration display: The number light is on and steady to display the duration of the operation, on the time, the “min” is lighting; The device automatically switches to operation duration display after the pump motor has been working for 3 seconds.

Note:

The breast pump features a memory function which allow it to remember and start with the previously set suction level and mode the next time you use it.

3. CHARGING

* It will take approximately 120 minutes to fully charge the device. After being fully charged, it can be used for about 120 minutes.
* When the three battery indicator lights all light up, the battery is fully charged.
* When the battery is low, the first indicator light flashes. When it starts flashing, the battery only has enough power left for one more pumping session (30 minutes).

4. CLEANING AND DISINFECTION

4.1 Cleaning

* For the best sterilization results,please clean and disinfect the pump before the first use.
* Before cleaning and disinfection, please remove all accessories.

* Non-washable parts:



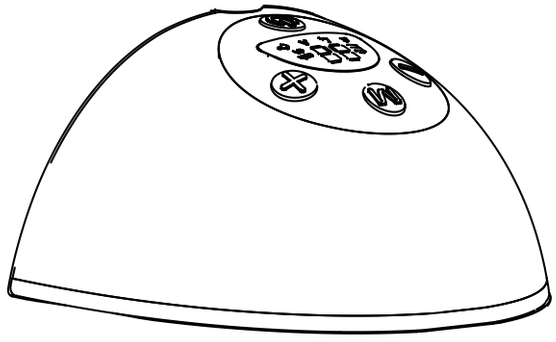

The pump motor contains electronics that should be kept dry. Use a clean, damp cloth to clean the pump motor. Any other cleaning method will be classed as misuse under the warranty.

* Washable parts:

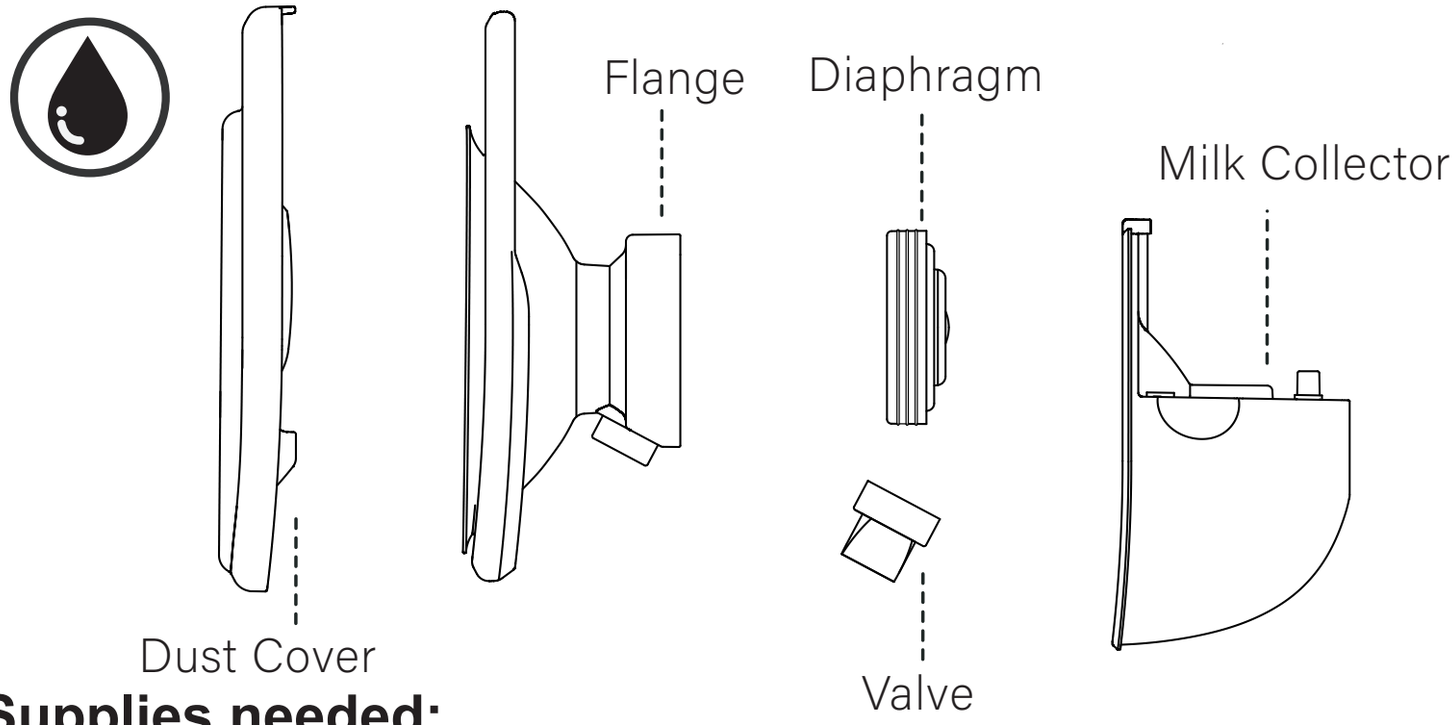

Supplies needed:

- Mild dish soap
- Clean dishcloth or soft brush
- Clean wash basin
- Clean water

⚠WARNING

Breast pumps are personal care items intended for a single user only and should never be rented or shared. Separate and wash all parts that come in contact with the breast and breast milk immediately after use, so as to avoid breast milk residue and prevent bacteria growth.

1. Rinse all separated parts that come in contact with breast and breast milk in 25-30℃(77-86°F)water to remove breast milk residue.

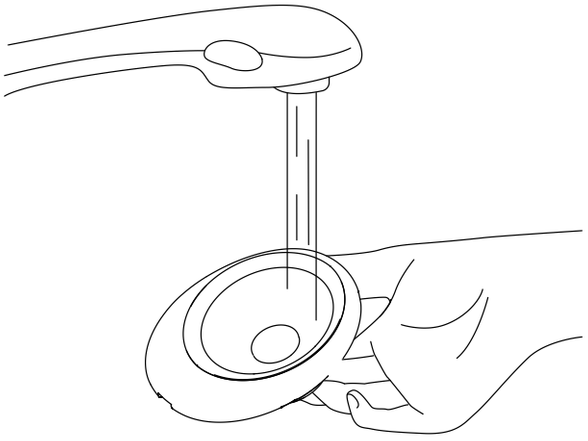

2. Once rinsed, parts that have touched the breast or breast milk should be placed in a clean wash basin used only for washing infant feeding equipment.

- Soak all washable parts in 40-60°C (104-140°F) soapy water for 3~5 minutes.
- Wash each part with a clean dishcloth or soft brush.
- Rinse all separated parts with clear water.

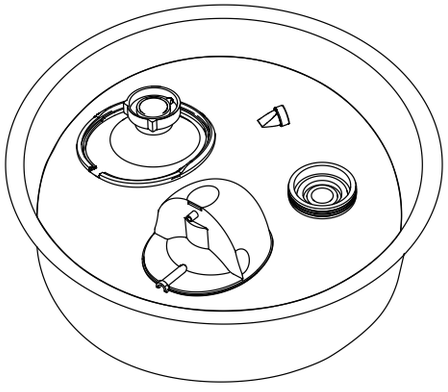

3.Place parts on a clean surface or towel.

- Allow all parts to air dry.
- Store dry parts in a clean, cool place when not in use
- Do not store wet or damp parts.

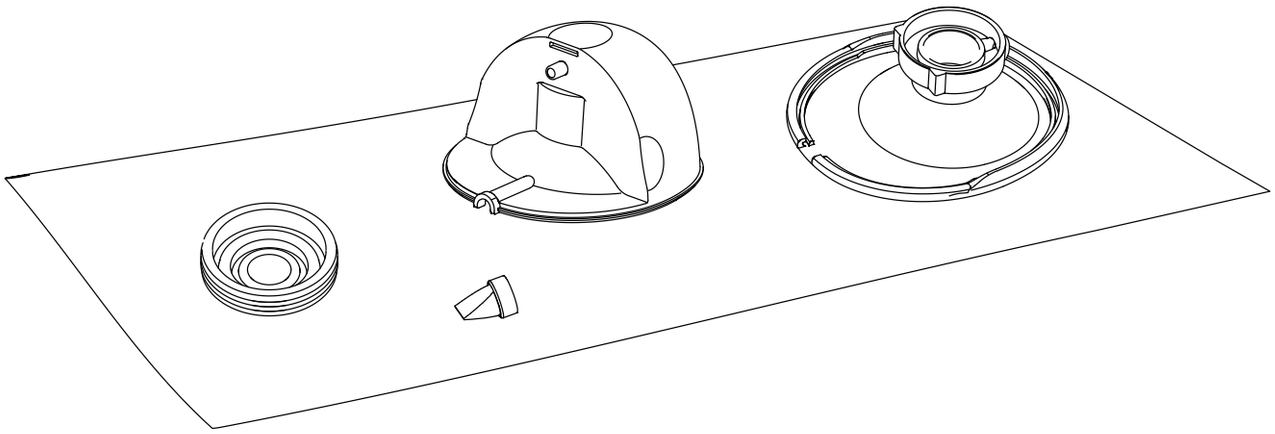

Caution:Only use potable water for cleaning.

4.2 Sanitizing

* Breast pump components that contact the breast and breast milk (e.g., flange, flang insert, milk collector, diaphragm, valve and dust cover) can be hand-washed inthe sink.

Precaution:

The pump body which houses the electrical components should be wiped down with a low-level disinfectant such as ethyl alcohol or isopropyl alcohol (70%- 90 %).

- Clean pot for 100°C (212°F) water
- Clean water
- Tongs

Washable parts to sterilize:

- Milk Collector
- Diaphragm
- Flange
- Valve

1 Fill a pot with enough water to cover all parts.

- Bring water to a boil
- Place parts in 100°C (212°F) water for 5-10 minutes.

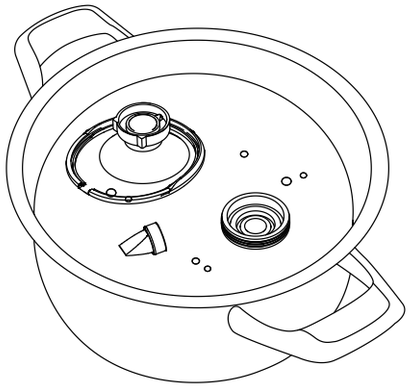

2 Allow water to cool and gently remove parts from water with tongs.

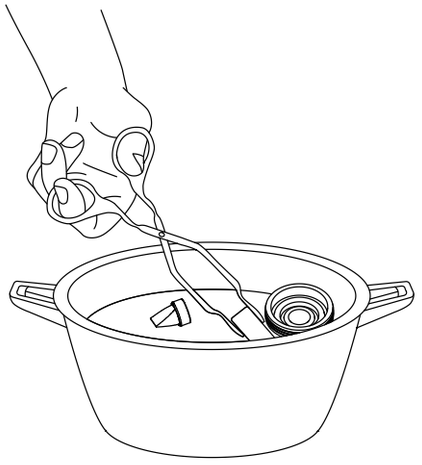

3 Place parts on a clean surface and /or towel.

- Allow all parts to air dry.
- Store dry parts in a clean, cool place when not in use.
- Do NOT store wet or damp parts,

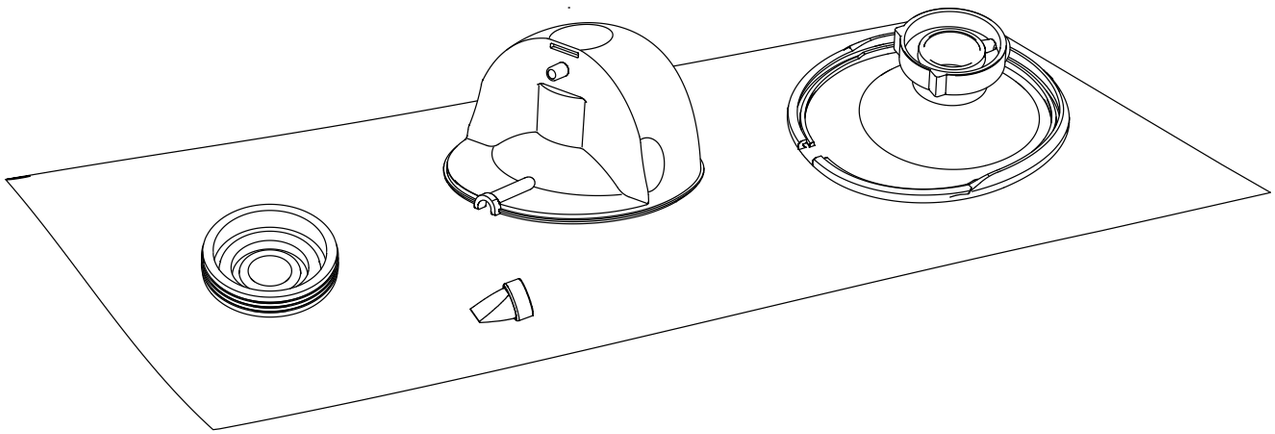

5. ASSEMBLY

Caution: Wash your hands with soap and water, and inspect and assemble clean pump kit.

1. Gently push the flange and the valve into the milk collector. Make sure there are no gaps.

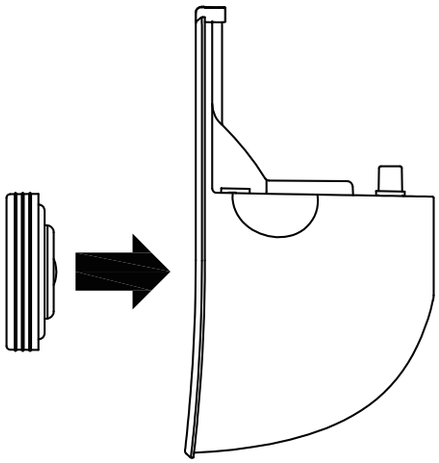

2. Put the silicone diaphragm onto the motor, press with hands to make the edge fasten tightly to ensure a perfect seal.

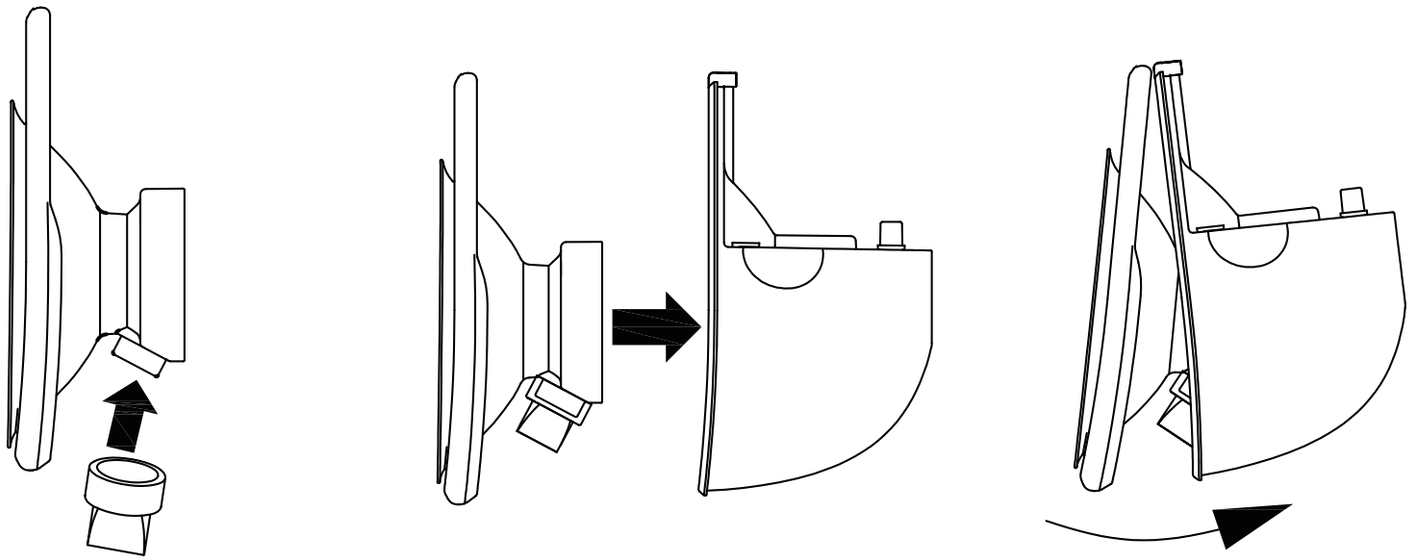

3. Assemble the pump motor and milk collector. Make sure there are no gaps.

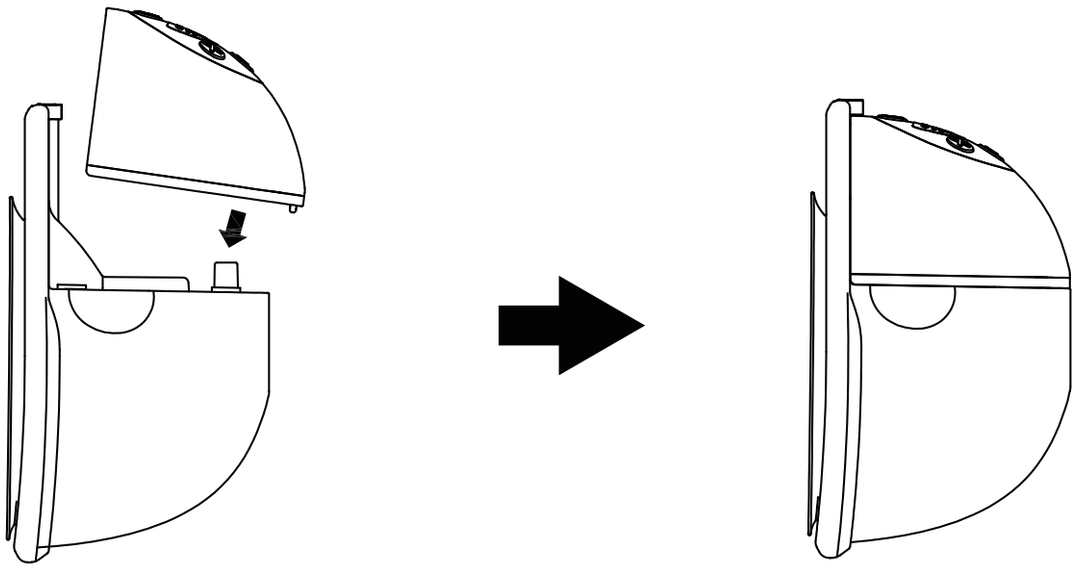

4. Choose correct flange size based on your personal needs.

6. USE TIPS

1. Sanitize the washable parts (e.g., valve, diaphragm, milk collector, and flange) before use. Place the washable parts in a clean pot and fill the pot with enough water to cover them. Let the water boil for 1-5 minutes, ensuring the parts do not touch the side of the pot.
2. The pump body which houses the electrical components should be wiped down with a low-level disinfectant such as ethyl alcohol or isopropyl alcohol (70%-90%). Do not immerse the pump motor in water.
3. Wash the valve, diaphragm, milk collector, and flange immediately after use to avoid breast milk residue and prevent bacteria growth.

4. The breast pump is equipped with the lithium-ion battery. When the battery indicator is green, it indicates fully charged. If the battery indicator is red, it indicates a low battery. If the red light flashes 3 times, the motor will shut down immediately.
5. The milk collector can hold up to 150ml breast milk. The breast pump will shut off automatically after finishing a 20-minute pumping session to ensure overfill does not occur.
6. It is recommended that washable parts (e.g, valve, diaphragm, milk collector, dust cover and flange) be replaced every two or three months, depending upon how frequently the pump is used.

7. SPECIFICATION

Model	K8
Product Name	Wearable breast pump
Input	5V ⎓ 1A
Battery	Rechargeable lithium-ion battery
Working Temperature	-20 ℃ to 85 ℃
Battery Capacity	1000mAh
Noise	≤50dB

Disposal



This product bears the selective sorting symbol for Waste electrical and electronic equipment (WEEE).

This means that this product must be handled pursuant to European directive 2012/19/EU in order to be recycled or dismantled to minimize its impact on the environment. User has the choice to give his product to a competent recycling organization or to the retailer when he buys a new electrical or electronic equipment.

9. EMC GUIDANCE

Warning: Don't use near active HF surgical equipment and the RF shielded room of an ME system for magnetic resonance imaging, where the intensity of EM disturbances is high.

Warning: Use of this equipment adjacent to or stacked with other equipment should be avoided because it could result in improper operation. If such use is necessary, this equipment and the other equipment should be observed to verify that they are operating normally.

Warning: Use of accessories, transducers, and cables other than those specified or provided by the manufacturer of this equipment could result in increased electromagnetic emissions or decreased electromagnetic immunity of this equipment and result in improper operation.

Warning: Portable RF communications equipment (including peripherals such as antenna cables and external antennas) should be used no closer than 12 in (30 cm) to any part of the equipment, including cables specified by the manufacturer Otherwise, degradation of the performance of this equipment could result.

Guidance and Manufacturer's Declaration-Electromagnetic Emissions	
Emissions test	**Compliance**
RF emissions CISPR 11	GROUP 1
RF emissions CISPR 11	Class B
Harmonic emissions IEC 61000-3-2	Class A
Voltage fluctuations/flicker emissions IEC 61000-3-3	Complies

Guidance and Manufacturer's Declaration-Electromagnetic Immunity		
Immunity Test	**IEC 60601-1-2 Test level**	**Compliance level**
Electrostatic discharge (ESD) IEC 61000-4-2	±8 kV contact ±2 kV, ±4kV, ±8 kV, ±15 kV air	±8 kV contact ±2 kV, ±4kV, ±8 kV, ±15 kV air
Electrical fast transient/burst IEC 61000-4-4	±2 kV for power supply lines ±1 kV for input/output lines	±2 kV for power supply lines ±1 kV for input/output lines

Surge IEC 61000-4-5	± 0.5 kV, ± 1 kV line(s) to line(s) + 0.5 kV, ± 1 kV, ± 2 kV line(s) to earth	± 0.5 kV, ± 1 kV line(s) to line(s) + 0.5 kV, ± 1 kV, ± 2 kV line(s) to earth
Voltage dips, short interruptions and voltage variations on power supply input lines IEC 61000-4-11	0 % UT; 0.5 cycle at 0°,45°,90°, 135°, 180°, 225°, 270°, 315° 0 % UT ; 1 cycle 70 % UT; 25/30 cycle 0% UT; 250/300 cycle	0 % UT; 0.5 cycle at 0°,45°,90°, 135°, 180°, 225°, 270°, 315° 0 % UT ; 1 cycle 70 % UT; 25/30 cycle 0% UT; 250/300 cycle
Power frequency magnetic field IEC 61000-4-8	30 A/m 50Hz/60Hz	30 A/m 50Hz/60Hz
Conduced RF IEC61000-4-6	3 V r.m.s. 150 kHz to 80 MHz 6 V RMS in the ISM and amateur bands between 0.15 MHz and 80 MHz	3 V r.m.s. 150 kHz to 80 MHz 6 V RMS in the ISM and amateur bands between 0.15 MHz and 80 MHz
Radiated RF IEC61000-4-3	10 V/m 80 MHz – 2,7 GHz 80 % AM at 1 kHz	10 V/m 80 MHz – 2,7 GHz 80 % AM at 1 kHz
NOTE UT is the a.c. mains voltage prior to application of the test level.		

Guidance and Manufacturer's Declaration – IMMUNITY to proximity fields from RF wireless communications equipment					
Immunity test	**IEC60601 test level**				**Compliance level**
	Test frequency	**Modulation**	**Maximum power**	**Immunity level**	
Radiated RF IEC 61000-4-3	385 MHz	**Pulse Modulation: 18Hz	1.8W	27 V/m	27 V/m
	450 MHz	*FM+ 5Hz deviation: 1kHz sine	2W	28 V/m	28 V/m
	710 MHz 745 MHz 780 MHz	**Pulse Modulation: 217Hz	0.2W	9 V/m	9 V/m
	810 MHz 870 MHz 930 MHz	**Pulse Modulation: 18Hz	2W	28 V/m	28 V/m
	1720 MHz 1845 MHz 1970 MHz	**Pulse Modulation: 217Hz	2W	28 V/m	28 V/m
	2450 MHz	**Pulse Modulation: 217Hz	2W	28 V/m	28 V/m
	5240 MHz 5500 MHz 5785 MHz	**Pulse Modulation: 217Hz	0.2W	9 V/m	9 V/m

Note* – As an alternative to FM modulation, 50 % pulse modulation at 18 Hz may be used because while it does not represent actual modulation, it would be worst case.
Note** – The carrier shall be modulated using a 50 % duty cycle square wave signal.

10. GLOSSARY & SYMBOLS

Symbol	Explanation
	Indicates to follow the instructions for use.
	Indicates important information such as warnings and cautions.
	Indicates usage tips, additional information or a note.
	Indicates the manufacturer.
	Indicates the manufacturing date.
	Indicates that the part of the appliance that comes into physical contact with the user (also known as the applied part) is of type BF (Body Floating) according to IEC 60601-1. The applied part is the breast pump kit.

REF	Indicates manufacturer's catalog number of the breast pump.
	Indicates 'direct current'.
SN	Indicates the manufacturer's serial number of the medical device.
	Humidity Limitation
	Temperature Limit
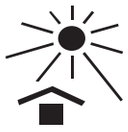	Indicates that the breast pump must be kept out of direct sunlight.
	Indicates that the breast pump must be kept dry.
	This symbol indicates not to dispose to the device together with unsorted municipal waste (in accordance with local regulations).

FC	Indicates the compliance with the requirements of the Federal Communications Commission.
LOT	Lot Number
MEHRWEG	Recycling
IP22	Ingress Protection
CE	CE LOGO
	Atmospheric Limitation
	Consult instructions for use.
	Type BF Applied Part

11. FCC COMPLIANCE

Note:

Any Changes or modifications not expressly approved by the party responsible for compliance could void the user's authority to operate the equipment.
This device complies with part 15 of the FCC Rules. Operation is subject to the following two conditions: (1)This device may not cause harmful interference, and (2) this device must accept any interference received, including interference that may cause undesired operation.
Note:
This equipment has been tested and found to comply with the limits for a Class B digital device, pursuant to part 15 of the FCC Rules. These limits are designed to provide reasonable protection against harmful interference in a residential installation. This equipment generates uses and can radiate radio frequency energy and, if not installed and used in accordance with the instructions, may cause harmful interference to radio communications. However, there is no guarantee that interference will not occur in a particular installation. If this equipment does cause harmful interference to radio or television reception, which can be determined by turning the equipment off and on, the user is encouraged to try to correct the interference by one or more of the following measures:

— Reorient or relocate the receiving antenna.
— Increase the separation between the equipment and receiver.
— Connect the equipment into an outlet on a circuit different from that to which the receiver is connected.
— Consult the dealer or an experienced radio/TV technician for help.